CROWN
MACHINERY

CROWN
MACHINERY

New Innovation Technology for Soybean Protein recovery from Crown Machinery

Crown Machinery Enterprise Introduction

Crown Machinery Inc. is a modern innovative high-tech centrifuge R&D and manufacture enterprise with four main branches in global work located in USA , South Korea, Philippine and China. Adhering to the concept of quality is the enterprise life, innovation is the driving force for the development, Conform to the trend of the development of modern industry, Fusion concept of global economic integration, Creative thinking, Integrate liquid separation processing industry leading enterprise in the upstream and downstream resources; Gather technical force; Together with the power of the global enterprise for business purposes; Dedicated to supply the clients complete separation solution.

Our company assemble a number of skillful, talented professionals, introduction advanced of international centrifuge technology with 30 years experiences of the development and design, through adopting international advanced management method, we have developed very professional separator and centrifuge for edible oil , pharmaceutical , chemical , waste project and various liquid industry. Until now we have accumulated more than 500 clients in global world market and get wide good feedback for our products and service, as our enterprise name "Crown Machinery" described we would like to supply the products like the crown quality and service.

Nowadays, our USA branch mainly forwards the waste-water market; Manila branch mainly prompts the coconut products machinery in Asia-Pacific market; Our Korean branch also named the Hanil Science Medical Co.,Ltd. is focusing on the Bio-tech and Bio-pharmaceutical market; And Liaoyang Crown Machinery Co.,Ltd. in China works as the head-quarter of four branches to serve the machinery selection, sale, technology support and after-service job.

Up to now, we have successfully introduced many clients' final products such as coconut oil into Chinese market to achieve a mutually beneficial win-win situation. We do hope serving the client not only the products but also the wonderful experience to cooperate with us.

Welcome to contact and visit us.

CROWN
MACHINERY

www.crown-machinery.com

Soy Protein Extraction Centrifuge

CHINA
No.13093-06-02 Victory Community
Baita District Liaoyang
China

PHILIPPINES
Suite 310 Intramuros Corporate Plaza
Recoletos St., Intramuros Manila
Philippines

USA
6900 46th Street Kenosha
WI 53144

KOREA
5-4,Songnim-Ro 48beon-Gil
yuseong-Gu, Daejon
Korea

sales@crown-machinery.com

+86 186 4192 8887

China **+86 419 2883215**
Philippines **+63 2 2549729**
USA **+1 262 656 7680**
Korea **+82 42 825 4260**

+86 419 2122006

Soy protein is a protein that is isolated from soybean. It is made from soybean meal that has been de-hulled and de-fatted. soybeans are processed into three kinds of high protein commercial products : soy flour, concentrates, and isolates. Soy protein isolate has been used since 1959 in foods for its functional properties. Recently, soy protein popularity has increased due to its use in health food products, and many countries allow health claims for foods rich in soy protein.

The soy meal is mixed with water and isoelectrically adjusted so that the majority of the protein goes into solution. This protein-rich solution must then be separated from the solid matter. A traditional configuration for doing this features extraction consisting of vibrating and rotary screens, followed by optional purification and concentration. However, decanter centrifuges from Crown-Machinery are ideal as a replacement for such traditional systems, because of their extreme efficiency and high solids handling capacity.

Soy Protein Extraction

The principles used in the production of soy protein isolate are basically simple. Using de-fatted soy flour or flakes as the starting material, the protein is first dissolved in water. The resulting solution is then separated from the solid residue. Finally, the protein is precipitated from the solution, and then separated and dried.

For companies in the soy protein industry, the prime objectives are to improve both product purity and yield. These depend on many different parameters, including alkalinity, extraction time, temperature, the ratio of water to soy meal, heat treatment and agitation.

One of the key features of the soy protein isolate production process is the separation of the protein from the solid soybean residue. The range of decanter centrifuges is particularly well suited for dealing with this.

Decanters for Efficient Protein Recovery

Crown Machinery supplies decanters in a wide range of sizes and versions – they are always optimized to meet the specific processing capacity and the separating task which has to be performed. In the field of protein recovery, the decanters are used for extracting, concentrating, recovering and washing the protein, we are specially designed to meet the hygiene requirements of soy protein manufacturers and other quality-conscious food industry companies. This is due to their exceptional solids handling capacity, high standards of hygiene and low cleaning and maintenance requirements.

Disc Stack Separators for Protein Recovery

Within protein recovery, clarifiers of Crown Machinery Disc Stack Separator represent the recovery stage from the centrate from protein precipitation. This not only increases the yield of valuable protein; it also simultaneously reduces the COD value in the effluent. Higher yields combined with lower costs of effluent treatment – the recovery stage considerably increases the efficiency of the entire process. However, the engineering which is employed must be customized in an optimum manner to meet the needs of the product and the process stage.

Soy Protein Recovery Flow Chart

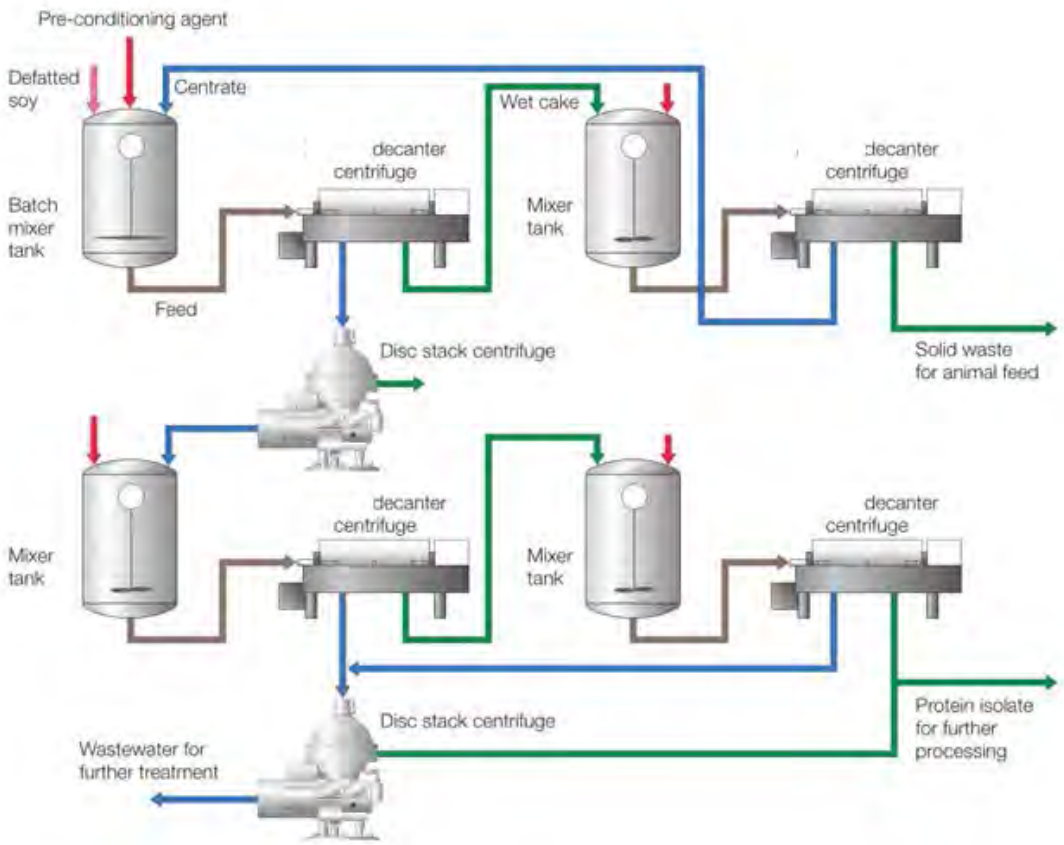

Decanter Centrifuge

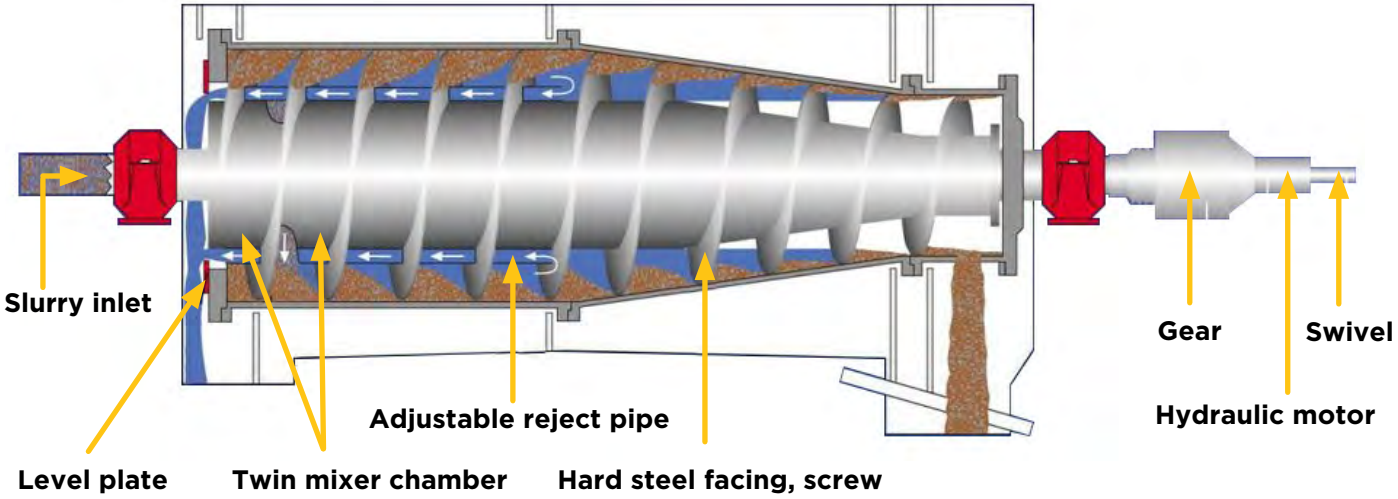

Working Principle

- 1. Feed slurry is introduced into the conveyor hub. As the feed accelerates to the machine speed, the slurry is delivered by centrifugal force into the rotating bowl by way of ports in the conveyor hub.
- 2. The solids settle through the liquid pool formed on the wall of the bowl. The solids are then conveyed, due to a slight differential between the screw conveyor and bowl, up the drying beach to the solids discharge ports.
- 3. The clarified liquors are discharge in the opposite direction from adjustable overflow ports.

Main Parameter

Model	300 x 1350	355 x 1600	450 x 1800	520 x 2200	650 x 2600
Bowl Dia. (mm)	300	350	450	520	650
Through-put Capacity (L/H)	1000-3000	3000-5000	50000-100000	100000-200000	200000-500000
Bowl Length Dia.(mm)	1350	1600	1800	2200	2600
L&D Ratio	1:4.5	1:4.5	1:4.0	1:4.2	1:4.0
Bowl Speed (r/min)	4200	3800	3200	3000	2800
Separation Factor	3000G	2868G	2575G	2620G	2850G
Screw Differential (r/min)	5-30 Stepless Ajustable	2-20 Stepless Adjustable	4-28 Stepless Adjustable	5-25 Stepless Adjustable	5-25 Stepless Adjustable
Motor (kw)	Main Motor11 Vice4	Main Motor15 Vice7.5	Main Motor30 Vice11	Main Motor45 Vice15	Main Motor75 Vice22
Noise db(A)	≤85	≤85	≤85	≤85	≤85

*Actual production capacity base on the raw materials.

Disc Stack Centrifuge

DGC series Disc Centrifuge Operating principles

Whole separation process of a disc centrifuge accomplished through a rotating bowl, which is mounted on the top of the vertical axis driven by the motor at high-speed rotation. The bowl consist a paring of discs that are nestled together, and a small space between the disc.

Suspension is added by a inlet pipe located in the center of the bowl. When the suspension flows through the gap between the discs, the solid particles settle under the centrifugal force on the disc to form a sediment, then it slides out of the disc surface and accumulates in the largest diameter of the bowl, and the separated liquid discharges from the outlet of bowl. The solids phase will automatically discharged for batches.

*A suspension is a heterogeneous mixture containing solid particles that are sufficiently large for sedimentation.

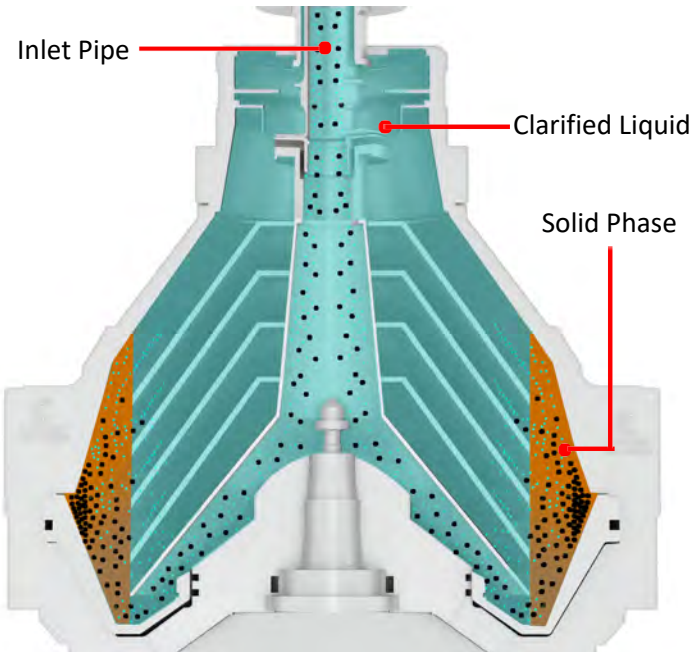

Main Parameter

Model	Bowl Speed (rpm)	Through-put Capacity (L/H)	Running Load (kw)	Dimensions (mm)		
				Width	Front-to-Back	Height
300	7302	300-500	4	950	950	1250
400	7070	1000-2000	7.5	1555	1130	1640
480	6600	3000	15	1780	1500	1900
500	6600	5000	18.5	1780	1500	1900
550	6000	10000	22	1800	1850	1900

*Actual production capacity base on the raw materials.

Liquid Feeding/Discharging Configuration

DGC series
One liquid Phase

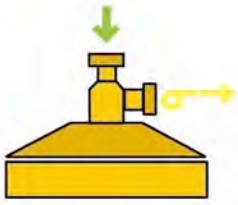

Feeding Material

Liquid Phase

Flow with Pressure

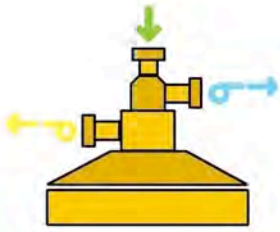

DGS series
Two liquid Phase

Feeding Material

Light Phase

Flow with Pressure

Heavy Phase

Flow with Pressure

Discharging Method

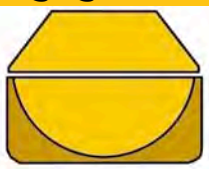

Manual Discharging

Shut down and open the bowl, manually remove the inside sediment by labor.

Automatic Discharging

Through Intermittent open lower parts of the bowl, sludge discharged automatically.

Continuous Discharging

Sludge discharging achieve by the nozzles around the pericline.

Disc Separation

Clarification

Separate the solid particles form the liquid

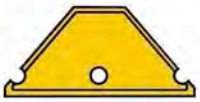

Separation

Separate a heavy liquid phase from major light liquid phase, meanwhile the suspended solid particles be separated as well. Maximum level of purified the light liquid phase.

Concentration

Separate a light liquid phase from major heavy liquid phase, meanwhile the suspended solid particles be separated as well. Maximum level of purified the heavy liquid phase.

Optional Components and Systems

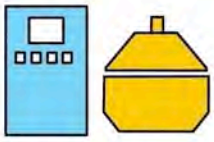

Electric Cabinet

Monitoring and adjustment of power , parameters setting and safety devices.

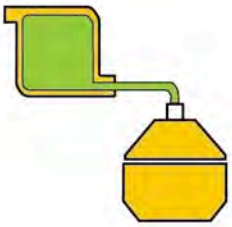

Gravity Feeding System

Ensure the material contnous and stable feeding to centrifuge.

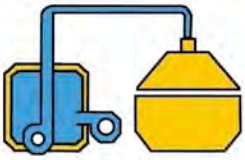

CIP Cleaning System

Control the system clean the separation components automatically.

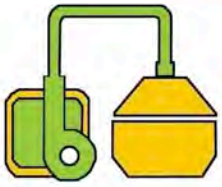

Feeding Pump

Ensure the flow of material to the centrifuge is stable and adjusted automatically.

CROWN
MACHINERY

2017 CATALOGUE

PHILIPPINES
Suite 310 Intramuros Corporate Plaza, Recoletos St., Intramuros, Manila Philippines

Tel: +63 2 2549729

CHINA
No.13093-06-02 Victory Community, Baita District Liaoyang, China

Tel: +86 419 2883215

KOREA
2FL, Hanil bldg, #527-1 Hagi-Dong, Yuseong-Gu, Daejeon, 305-358, Korea

Tel: +82-42-825-4260

AMERICA
6900 46th Street Kenosha,WI 53144,America

Tel:1-262-656-7680

AUSTRALIA
Boundary Road,Laverton North, VIC, Australia.

TEL:+61 0408 836 697

PAKISTAN
Suite# 311, 3rd Floor, Anum Trade Center, Near Ghani Chowrangi, Site Karachi,Pakistan.
TEL:+021 3257 2200

Iran
No.5, 1st floor, Bldg.32, Shahid Hosseini St., Karimkhan Av., Tehran Iran
Tel: +98-21-88321070/4